energies

MDPI

Article

# Coordinated Source–Network–Storage Expansion Planning of Active Distribution Networks Based on WGAN-GP Scenario Generation

**Dacheng Wang [1], Xuchen Wang [1], Minghui Duan [1], Zhe Wang [1], Yougong Su [1], Xin Liu [1], Xiangyi Wu [1], Hailong Nie [1], Fengzhang Luo [2,*] and Shengyuan Wang [2,*]**

[1] State Grid Tianjin Electric Power Company, Tianjin 300010, China
[2] Key Laboratory of Smart Grid of Ministry of Education, Tianjin University, Tianjin 300072, China
* Correspondence: luofengzhang@tju.edu.cn (F.L.); wangshengyuan@tju.edu.cn (S.W.); Tel.: +86-139-2090-2432 (F.L.)

**Abstract**

To address the challenges of insufficient uncertainty characterization and inadequate flexible resource coordination in active distribution network (ADN) planning under high-penetration distributed renewable energy integration, this paper proposes a WGAN-GP-based coordinated source–network–storage expansion planning method for ADNs. First, an improved Wasserstein Generative Adversarial Network (WGAN-GP) model is employed to learn the statistical patterns of wind and photovoltaic (PV) power outputs, generating representative scenarios that accurately capture the uncertainty and correlation of renewable generation. Then, an ADN expansion planning model considering the E-SOP (Energy Storage-integrated Soft Open Point) is developed with the objective of minimizing the annual comprehensive cost, jointly optimizing the siting and sizing of substations, lines, distributed generators, and flexible resources. By integrating the energy storage system on the DC side of the SOP, E-SOP achieves coordinated spatial power flow regulation and temporal energy balancing, significantly enhancing system flexibility and renewable energy accommodation capability. Finally, a Successive Convex Cone Relaxation (SCCR) algorithm is adopted to solve the resulting non-convex optimization problem, enabling fast convergence to a high-precision feasible solution with few iterations. Simulation results on a 54-bus ADN demonstrate that the proposed method effectively reduces annual comprehensive costs and eliminates renewable curtailment while ensuring high renewable penetration, verifying the feasibility and superiority of the proposed model and algorithm.

**Keywords:** active distribution network; E-SOP; WGAN-GP; Source–Network–Storage Coordinated Planning; uncertainty modeling

Check for updates

Academic Editor: Michael Negnevitsky

Received: 20 November 2025
Revised: 20 December 2025
Accepted: 30 December 2025
Published: 31 December 2025

**Copyright:** © 2025 by the authors. Licensee MDPI, Basel, Switzerland. This article is an open access article distributed under the terms and conditions of the Creative Commons Attribution (CC BY) license.

## 1. Introduction

Against the backdrop of the "dual carbon" goals, Active Distribution Networks (ADNs) are gradually becoming key enablers for energy system decarbonization and the high-penetration integration of renewable energy sources [1,2]. With the large-scale integration of diverse resources such as wind power, photovoltaics (PVs), energy storage, and controllable loads [3], system operation is characterized by strong coupling, high volatility, and multidimensional uncertainty, rendering traditional static planning models increasingly inadequate for coordinating the operation of heterogeneous multi-source devices [4]. Therefore, it is imperative to conduct expansion planning research for ADNs

that accounts for uncertain scenarios and accommodates the large-scale integration of distributed resources, aiming to achieve the coordinated and optimized allocation of network structures and spatiotemporal flexible resources.

The introduction of flexible interconnection and energy storage technologies has provided new control approaches for ADN expansion planning. A Soft Open Point (SOP) enables controllable bidirectional power flow to facilitate energy exchange between feeders and regulate node voltage, significantly enhancing the spatial power flow regulation capability of the distribution network [5,6]. A Battery Energy Storage System (BESS) performs temporal energy shifting through charging and discharging processes, contributing to peak shaving, valley filling, and smoothing of renewable energy output [7,8]. When a BESS is integrated on the DC side of an SOP to form an integrated electricity–storage structure (E-SOP), the spatial regulation capability of the SOP and the temporal shifting function of the BESS can be tightly coupled within a single device platform, potentially enhancing the system's spatiotemporal coordinated control capability. However, existing studies (e.g., [9–11]) generally consider SOPs and BESSs as independent flexible resources, with limited focus on the E-SOP structure based on DC-side storage integration and its planning and operational mechanisms.

In ADN expansion planning, the siting and sizing of distributed generation (DG), the deployment of flexible interconnection systems such as E-SOP, and the reinforcement of network topology are inherently coupled. DG layout alters power flow distribution and voltage levels [12], while E-SOP mitigates the resulting local bottlenecks through power flow reconfiguration and energy storage regulation, and in turn affects the feasible capacity of DG integration and the extent of network reinforcement required. Most existing planning studies, such as [2,4,13], are still based on fixed ADN topologies and predefined DG configurations, lacking an integrated modeling and joint optimization framework for the DG–E-SOP–network structure as a whole. As a result, they fall short of fully exploiting the potential of spatiotemporal flexible resources to enhance the overall operational performance of ADNs from a system-level perspective.

To effectively address the stochastic fluctuations and operational uncertainties of renewable energy output, it is necessary to explicitly consider multiple possible operating scenarios in ADN expansion planning models. Currently, two main approaches are commonly used. The first is the scenario analysis method [14,15], which generates a set of representative operating scenarios based on the probabilistic characteristics of uncertain variables, approximating stochastic fluctuations through a limited number of deterministic operating conditions. The second is the clustering method based on historical data [2,16], which clusters actual wind and solar output profiles to obtain several representative curves for optimization. The former requires assumptions about the output distribution and parameter fitting, making the model construction complex and sensitive to distribution assumptions. The latter is easier to implement but highly sensitive to the coverage of the sample set and clustering criteria, with a limited number of scenarios that struggle to fully capture high-volatility periods and extreme output characteristics, leading to insufficient accuracy in uncertainty representation. In addition to scenario-based stochastic programming, robust optimization has also been widely applied in planning studies of renewable-dominated power systems to address the uncertainty of renewable energy generation. For example, ref. [17] proposed a robust planning approach based on a bi-directional converter-based interconnection structure to enhance the operational reliability of hybrid microgrids with high renewable penetration under uncertain conditions, demonstrating promising performance.

To address the aforementioned challenges, this paper proposes an ADN source–network–storage coordinated expansion planning approach based on Wasserstein Gener-

ative Adversarial Network with Gradient Penalty (WGAN-GP) scenario generation and spatiotemporal flexibility coordination. First, a scenario generation framework based on WGAN-GP is developed to generate large-scale wind and solar time-series scenarios, ensuring high fidelity in terms of distributional consistency, temporal continuity, and coverage of extreme events. Second, at the flexible resource level, an integrated E-SOP structure is constructed by incorporating a BESS on the DC side of the intelligent SOP, enabling coordinated spatial power flow regulation and temporal energy balancing. Third, a joint ADN planning model is formulated, including DG siting and sizing, E-SOP siting and sizing, feeder layout, and substation construction/expansion, to achieve system-level optimization of source–network–storage configuration and topology reinforcement. Finally, to solve the non-convex optimization problem efficiently and accurately, a sequentially tightened second-order cone programming (SOCP) relaxation algorithm is introduced. Case studies conducted on a 54-bus ADN validate the effectiveness of the proposed approach.

The remainder of this paper is organized as follows. Section 2 introduces the WGAN-GP-based scenario generation method for wind and solar power output. Section 3 presents the expansion planning model for ADNs and describes the structure of the E-SOP system. Section 4 details the solution method based on a sequentially tightened convex relaxation algorithm. Section 5 provides case studies and result analysis. Finally, Section 6 concludes the paper.

## 2. Scenario Generation Method for Wind and Solar Power Based on WGAN-GP

To alleviate common issues in traditional Generative Adversarial Networks (GANs), such as gradient vanishing and mode collapse during training, this paper adopts a generative adversarial framework based on the WGAN. WGAN consists of a Generator ($G$) and a Discriminator ($D$), which interact through an adversarial game to approximate the distribution of real data. Unlike conventional GANs, WGAN employs the Wasserstein distance as the optimization objective, providing a more stable measure of the distributional discrepancy between generated and real samples.

Within this framework, the generator $G$ learns the mapping from a latent space to the data space, transforming samples drawn from a prior noise distribution $p_z(z)$ into pseudo-samples that approximate the real data distribution $p_g(x)$. The discriminator $D$ distinguishes whether the input sample originates from the real data $p_{data}(x)$ or is generated by $G$. Through continuous adversarial training, both $G$ and $D$ are iteratively optimized until the generated distribution closely approximates the real one. The objective functions of the generator and discriminator are defined as follows:

$$\min_G \max_D V(D,G) = \mathbb{E}_{x\sim p_{\text{data}}(x)}[\log D(x)] + \mathbb{E}_{z\sim p_z(z)}[\log(1 - D(G(z)))] \tag{1}$$

In this context, $G$ denotes the generator model, and $D$ represents the discriminator model. The variable $x$ refers to historical wind and solar data sampled from the real data distribution $p_{data}(x)$, while $z$ is a noise vector drawn from a prior distribution $p_z(z)$, typically a standard Gaussian distribution. The term $G(z)$ denotes the pseudo-sample generated by the generator. $D(x)$ and $D(G(z))$ represent the discriminator's output probabilities for real and generated samples, respectively. The symbols $\mathbb{E}_{x\sim p_{\text{data}}(x)}$ and $\mathbb{E}_{z\sim p_z(z)}$ denote the expectation under the real data and noise distributions, respectively.

To mitigate the gradient vanishing and mode collapse problems commonly encountered in traditional GAN training, this paper adopts a generative adversarial framework based on the WGAN. The Wasserstein distance, derived from optimal transport theory, is defined as the minimum cost required to transport one probability distribution to another.

It provides a more stable and meaningful measure of the discrepancy between distributions and is formally defined as:

$$W(p_{\text{data}}, p_g) = \sup_{\|D\|_L \leq 1} \mathbb{E}_{x \sim p_{\text{data}}(x)}[D(x)] - \mathbb{E}_{z \sim p_z(z)}[D(G(z))] \tag{2}$$

where $\|D\| \leq 1$ indicates that the discriminator satisfies the 1-Lipschitz continuity condition. This constraint is essential for ensuring training stability. However, enforcing Lipschitz continuity directly is difficult in practice. To address this, WGAN-GP introduces a gradient penalty (GP) mechanism to impose a soft constraint on the discriminator's gradient norm.

Instead of explicitly enforcing the Lipschitz condition, WGAN-GP incorporates a gradient penalty term into the objective function to indirectly ensure that the discriminator remains 1-Lipschitz continuous. The gradient penalty term is defined as:

$$GP = \mathbb{E}_{\hat{x} \sim p_{\hat{x}}}\left[(\nabla_{\hat{x}} D(\hat{x})_2 - 1)^2\right] \tag{3}$$

where $\hat{x} = \varepsilon x + (1 - \varepsilon)G(z)$, $\epsilon \sim U[0,1]$. $\varepsilon$ is a random variable uniformly distributed over the interval [0,1], used to control the interpolation ratio. $\nabla_{\hat{x}} D(\hat{x})$ denotes the gradient vector of the discriminator $D$ with respect to the input sample $\hat{x}$.where $(\,)_2$ denotes the L2 norm (Euclidean norm) of the gradient vector.

Finally, the optimization objective of WGAN-GP, incorporating the gradient penalty term, can be expressed as:

$$\min_G \max_D V(D, G) = \mathbb{E}_{z \sim p_z(z)}[D(G(z))] - \mathbb{E}_{x \sim p_{\text{data}}(x)}[D(x)] + \lambda \mathbb{E}_{\hat{x} \sim p_{\hat{x}}}\left[(\nabla_{\hat{x}} D(\hat{x})_2 - 1)^2\right] \tag{4}$$

where $\lambda$ is the gradient penalty coefficient used to balance the adversarial training objective and the regularization term. This method effectively enhances training stability, prevents mode collapse, and ensures that the generated sample distribution is more continuous and smooth.

Based on the characteristics of wind and solar power output curves, the neural network architectures of the discriminator and generator are designed as shown in Figure 1. Figure 1 illustrates the architecture of the generator and discriminator in the proposed WGAN-GP model. The generator takes a random noise vector as input and generates data with the same dimensionality as the wind–PV output time series through a series of fully connected layers and multiple transposed convolution layers for feature mapping and upsampling. The discriminator consists of multiple convolutional and fully connected layers, which extract features from the input samples and assess their authenticity. It is trained using the Wasserstein loss function with a gradient penalty term to enhance training stability. This architecture effectively captures both the statistical characteristics and temporal dependencies of wind and PV power outputs.

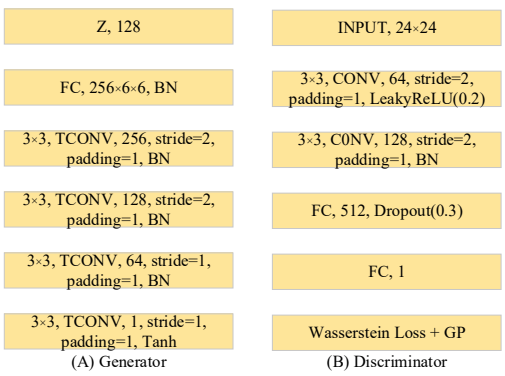


**Figure 1.** Neural network architectures of the generator and discriminator.

## 3. Expansion Planning Model for ADNs

### 3.1. Overall Modeling Framework

Based on the large-scale joint wind–solar time-series scenarios generated using WGAN-GP, this paper develops an ADN expansion planning model that jointly optimizes the sizing of E-SOPs and DGs, feeder layout, and substation construction/expansion. The model aims to minimize the total life-cycle cost of the system while satisfying operational safety and power balance constraints of the distribution network, thereby enhancing the hosting capacity and adaptability of ADNs to high-penetration renewable energy sources.

### 3.2. Objective Function

The objective of the planning model is to minimize the annualized total cost of the system across multiple scenarios, which includes both the annualized investment cost and the annualized operational cost. The objective function can be expressed as:

$$\min F = C_{inv}^{ann} + C_{op}^{ann} \tag{5}$$

where $C_{inv}^{ann}$ denotes the annualized investment cost, and $C_{op}^{ann}$ represents the annualized operation and maintenance (O&M) cost.

(1) Annualized Investment Cost

$$\begin{aligned} C_{\text{inv}}^{\text{ann}} &= \sum_{i\in\Omega_{\text{sub}}} c_i^{sub}\cdot a_i^{sub}\cdot S_i^{sub} + \sum_{l\in\Omega_{\text{line}}} c_l^{line}\cdot \alpha_l^{line}\cdot x_l^{line} + \sum_{j\in\Omega_{Wind}} c_j^{Wind}\cdot \alpha_j^{Wind}\cdot S_j^{Wind} \\ &+ \sum_{j\in\Omega_{PV}} c_j^{PV}\cdot \alpha_j^{PV}\cdot S_j^{PV} + \sum_{m\in\Omega_{BESS}} c_m^{BESS}\cdot \alpha_m^{BESS}\cdot E_m^{BESS} + \sum_{n\in\Omega_{SOP}} c_n^{SOP}\cdot \alpha_n^{SOP}\cdot S_n^{SOP} \end{aligned} \tag{6}$$

where $c_i^{\text{sub}}$, $c_l^{line}$, $c_j^{DG}$, $c_m^{BESS}$, $c_n^{SOP}$ are the unit investment costs of substations, feeders, DG, BESS, and SOP, respectively; $S_i^{\text{sub}}$, $x_l^{line}$, $S_j^{DG}$, $E_m^{BESS}$, $S_n^{SOP}$ represent the newly added capacities of substations, feeders, DGs, BESS, and SOP, respectively. Since an E-SOP consists of both a BESS and an SOP, their costs are represented separately in the above equation.

Additionally, $\alpha$ is the capital recovery factor used to annualize the investment cost of each device, and is calculated as:

$$\alpha_x = \frac{r(1+r)^{T_x}}{(1+r)^{T_x}-1} \tag{7}$$

where $r$ is the interest rate and $T_x$ is the service life of the equipment.

(2) Annualized O&M Cost

The annualized operational cost represents the total economic expenditure of the distribution network across all typical operating scenarios over a year. It mainly includes equipment maintenance costs $C_{main}^{(s)}$, electricity purchase costs $C_{pur}^{(s)}$, and penalties for curtailed wind and solar power $C_{curt}^{(s)}$. Assuming the entire year is divided into $N_s$ typical scenarios, and each scenario $s$ represents $D_s$ days, the annualized operational cost of the system can be expressed as:

$$C_{op}^{ann} = \sum_{s=1}^{N_s} D_s \cdot \left(C_{main}^{(s)} + C_{pur}^{(s)} + C_{curt}^{(s)}\right) \tag{8}$$

a. Equipment Maintenance Cost

$$C_{main}^{(s)} = \sum_{x \in \Omega_{all}} \mu_x K_x \tag{9}$$

where $\mu_x$ is the annual maintenance rate for device $x$, and $K_x$ is the investment cost of device $x$, as defined in Equation (6). The set $\Omega_{all}$ includes substations, feeders, wind turbines, PV units, and E-SOP devices.

b. Electricity Purchase Cost

$$C_{pur}^{(s)} = \sum_{t \in T} \rho_t^{grid} P_{t,s}^{grid} \Delta t \tag{10}$$

where $\rho_t^{grid}$ is the time-of-use electricity price from the upstream grid at time $t$, $\rho_{t,s}^{grid}$ is the power purchased from the upstream grid at time $t$ in scenario $s$, and $\Delta t$ is the time step.

c. Wind and Solar Curtailment Cost

$$C_{curt}^{(s)} = \sum_{j \in \Omega_{\text{Wind}}} \rho_{curt}^{Wind} \sum_{t \in T} P_{j,t,s}^{act} \Delta t + \sum_{k \in \Omega_{pv}} \rho_{curt}^{PV} \sum_{t \in T} P_{k,t,s}^{act} \Delta t \tag{11}$$

where $\rho_{curt}^{Wind}$ and $\rho_{curt}^{PV}$ are the unit penalty prices for wind and solar curtailment, respectively; $P_{j,t,s}^{act}$ and $P_{k,t,s}^{act}$ are the curtailed wind and solar power at time $t$ in scenario $s$.

### *3.3. Constraints*

To ensure the safe, economical, and feasible operation of the ADNs during the planning horizon, the proposed model incorporates the following constraints, covering equipment investment status, capacity configuration, network topology, and operational security.

(1) Equipment Capacity Constraints

a. E-SOP Power Balance Constraint

The structure of the E-SOP system is illustrated in Figure 2. The system consists of an intelligent SOP unit and a shared BESS unit, enabling flexible power flow regulation among feeders and coordinated spatiotemporal energy management. The core of the E-SOP comprises multiple bidirectional AC/DC converters, each connected to the system through AC interfaces on the feeder side, while the DC sides are interconnected via a shared DC bus, which is also connected to the BESS.

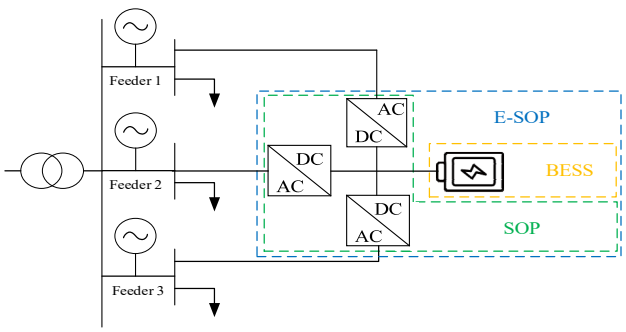


**Figure 2.** Structure of the E-SOP system.

As an energy buffer on the DC bus, the BESS facilitates energy sharing among different feeders. When the output of DGs on one feeder exceeds local demand, the BESS absorbs the surplus power; when another feeder experiences high load or insufficient DG, the BESS discharges to provide compensation. This allows for temporal power balancing and spatial energy support across multiple nodes.

The power exchange within the E-SOP must satisfy the principle of energy conservation, requiring the power at its two AC terminals and the DC-side BESS to remain balanced. This relationship can be expressed as:

$$P_{i,t}^{SOP,AC1} + P_{j,t}^{SOP,AC2} + P_{k,t}^{SOP,AC3} + P_{dc,t}^{BESS} + P_{i\&j,t}^{E-SOP,L} = 0 \tag{12}$$

In this equation, $P_{i,t}^{SOP,AC1}$, $P_{j,t}^{SOP,AC2}$ and $P_{k,t}^{SOP,AC3}$ represent the active power exchanged at the AC terminals of the E-SOP connected to nodes $i$, $j$, and $k$ at time $t$, respectively (positive when flowing outwards). $P_{dc,t}^{BESS}$ denotes the charging/discharging power of the DC-side BESS (positive when discharging). $P_{i\&j,t}^{E-SOP,L}$ represents the power loss associated with the SOP between nodes $i$ and $j$.

$$P_{i\&j,t}^{E-SOP,L} = A_i^{E-SOP}\sqrt{\left(P_{i\&j,t}^{E-SOP,AC}\right)^2 + \left(Q_{i\&j,t}^{E-SOP,AC}\right)^2} \tag{13}$$

where $A_i^{E-SOP}$ is the SOP power loss coefficient.

b. Capacity Constraints of AC Terminals in E-SOP

The active and reactive power outputs of each AC terminal in the SOP are limited by its rated capacity. The constraint can be formulated as:

$$\left(P_{i,t}^{SOP,AC}\right)^2 + \left(Q_{i,t}^{SOP,AC}\right)^2 \le \left(S_n^{SOP,\max}\right)^2 \tag{14}$$

where $P_{n,t}^{SOP}$ and $Q_{n,t}^{SOP}$ denote the active and reactive power at the AC terminal of the SOP at time $t$ in scenario $s$, and $S_n^{SOP,\max}$ is the rated apparent power capacity of the SOP terminal.

c. Power and Energy Constraints of BESS in E-SOP

The BESS in the E-SOP participates only in active power regulation. Its charging/discharging power and energy state must satisfy the following constraints:

$$-P_{BESS}^{\max} \le P_{dc,t}^{BESS} \le P_{BESS}^{\max} \tag{15}$$

$$E_t^{BESS} = E_{t-1}^{BESS} + \eta_{ch} P_{dc,t}^{BESS,ch}\Delta t - \frac{P_{dc,t}^{BESS,dis}}{\eta_{dis}}\Delta t \tag{16}$$

$$0.2E_m^{BESS} \le E_t^{BESS} \le E_m^{BESS} \tag{17}$$

where $E_t^{BESS}$ denotes the energy state of the BESS at time $t$, $P_{dc,t}^{BESS,ch}$ and $P_{dc,t}^{BESS,dis}$ are the charging and discharging power, respectively. $\eta_{ch}$ and $\eta_{dis}$ are the charging and discharging efficiencies.

d. DG Capacity Constraints

The installed capacities of wind and PV generation at each node must not exceed their respective upper limits. The constraint can be expressed as:

$$\begin{cases} 0 \le S_j^{Wind} \le Z_{\max,j}^{WTG},\ \forall j \in \Omega_{WT}, \\ 0 \le S_j^{PV} \le Z_{\max,i}^{PVG},\ \forall j \in \Omega_{PV} \end{cases} \tag{18}$$

where $Z_{\max,i}^{WTG}$ and $Z_{\max,i}^{PVG}$ denote the maximum allowable installed capacities of wind and PV generation at node $j$, respectively.

e. Network Topology Constraints

Since the planning model involves feeder routing and network design, it is necessary to ensure both the connectivity and radiality of the distribution network. Specific modeling approaches can be found in [18].

(2) System Operational Constraints

a. Voltage and Current Constraints

The node voltages and branch currents must remain within allowable operating limits to ensure system safety and reliability. The constraints are given by:

$$U_{i,\min}^2 \le v_{i,t} \le U_{i,\max}^2,\ \forall i \in \Omega_N, \tag{19}$$

$$l_{ij,t}^2 \le I_{ij,\max}^2,\ \forall (i,j) \in \Omega_{\text{line}} \tag{20}$$

where $v_{i,t}$ is the voltage magnitude at node $i$, $l_{ij,t}$ is the current magnitude on line $ij$, and $l_{ij,t}$, $U_{i,\max}^2$, $I_{ij,\max}^2$ are the respective voltage and current limits.

b. Power Flow Constraints

To ensure the operational feasibility of the ADNs under the integration of E-SOPs and distributed resources, power flow balance constraints are established based on the branch power model. The active and reactive power balance equations at each node are expressed as:

$$\sum_{j\in k(i)} P_{ij,t} - \sum_{n\in p(i)} \left(P_{ni,t} - R_{ni}(I_{ni,t})^2\right) = P_{i,t}^{inj},\ \forall i \in \Omega_N \tag{21}$$

$$\sum_{j\in k(i)} Q_{ij,t} - \sum_{n\in p(i)} \left(Q_{ni,t} - X_{ni}(I_{ni,t})^2\right) = Q_{i,t}^{inj},\ \forall i \in \Omega_N \tag{22}$$

where $P_{ij,t}$, $Q_{ij,t}$ are the active and reactive power flows on branch $ij$ at time $t$; $R_{ni}$, $X_{ni}$ are the resistance and reactance of branch $ij$; $(I_{ni,t})^2$ is the squared current magnitude on branch $ij$ at time $t$; $P_{i,t}^{inj}$, $Q_{i,t}^{inj}$ are the net active and reactive power injections at node $i$ at time $t$.$P_{ni,t}$ and $Q_{ni,t}$ denote the active and reactive power flows on branch $ni$ flowing into node $i$ at time $t$.

The nodal power injection $P_{i,t}^{inj}$, $Q_{i,t}^{inj}$ is composed of contributions from DG, E-SOP, loads, and controllable resources. The power balance at node $i$ can be expressed as:

$$P_{i,t}^{inj} = P_{i,t}^{E-SOP,AC} + P_{i,t}^{WT} + P_{i,t}^{PV} - P_{i,t}^{L} \tag{23}$$

$$Q_{i,t}^{inj} = Q_{i,t}^{E-SOP,AC} + Q_{i,t}^{WT} + Q_{i,t}^{PV} + Q_{i,t}^{SVC} - Q_{i,t}^{L} \tag{24}$$

where $P_{i,t}^{E-SOP,AC}$, $Q_{i,t}^{E-SOP,AC}$ are the active and reactive power outputs of the E-SOP at node $i$ at time $t$; $P_{i,t}^{WT}$, $P_{i,t}^{PV}$ represent the active power output from DG (including wind and PV) at node $i$ at time $t$; $P_{i,t}^{L}$, $Q_{i,t}^{L}$ are the active and reactive power demands at node $i$ at time $t$.

The voltage–power flow relationship on each line is given by:

$$v_{i,t} - v_{j,t} \ge 2\left(R_{ij}P_{ij,t} + X_{ij}Q_{ij,t}\right) - \left(R_{ij}^2 + X_{ij}^2\right)(I_{ij,t})^2 - M\left(1 - x_{ij}^{line}\right),\ \forall (i,j) \in \Omega_L \tag{25}$$

$$v_{i,t} - v_{j,t} \le 2\left(R_{ij}P_{ij,t} + X_{ij}Q_{ij,t}\right) - \left(R_{ij}^2 + X_{ij}^2\right)(I_{ij,t})^2 + M\left(1 - x_{ij}^{line}\right),\ \forall (i,j) \in \Omega_L \tag{26}$$

$$(I_{ij,t})^2 v_{i,t} - P_{ij,t}^2 - Q_{ij,t}^2 = 0,\ \forall (i,j) \in \Omega_L \tag{27}$$

where $M$ is a sufficiently large constant used for relaxation in the linearization of constraints, and $x_{ij}^{line}$ is a binary variable indicating the presence of line $ij$, where $x_{ij}^{line} = 1$ if the line is built, and $x_{ij}^{line} = 0$ otherwise.

## 4. Solution Methodology

### 4.1. Convex Relaxation of the Model

The proposed ADN expansion planning model includes nonlinear coupling among node voltages, branch power flows, and device power variables, resulting in a non-convex formulation that is difficult to solve directly while ensuring global optimality. To improve tractability and computational stability, convex relaxation is applied to the power flow equations and related operational constraints of the distribution network, reformulating the problem as a SOCP model. Details can be found in [19,20].

### 4.2. Successive Contraction of Convex Relaxation Algorithm

Although the SOCP-relaxed model significantly improves computational efficiency, its optimal solution may not strictly satisfy the physical consistency required by the original non-convex model. To reduce the relaxation gap introduced by convexification, this paper adopts a Successive Contraction of Convex Relaxation (SCCR) algorithm. By iteratively tightening constraint boundaries, the algorithm progressively approximates the feasible region of the original problem.

(1) Definition of Relaxation Gap

To quantitatively characterize the degree of relaxation, relaxation error metrics are defined for branches, SOPs, and BESSs as follows:

$$g_t^{flow} = 1 - \frac{(P_{ij,t})^2 + (Q_{ij,t})^2}{(I_{ij,t})^2 v_{i,t}} \tag{28}$$

$$g_t^{E-SOP} = 1 - A_i^{E-SOP} \frac{\sqrt{\left(P_{i\&j,t}^{E-SOP,AC}\right)^2 + \left(Q_{i\&j,t}^{E-SOP,AC}\right)^2}}{P_{i\&j,t}^{E-SOP,L}} \tag{29}$$

If $g_t^{flow}$, $g_t^{E-SOP}$ approach zero, it indicates that the relaxation accuracy in the corresponding components is high.

(2) Iterative Contraction Mechanism

The algorithm gradually tightens the feasible region by introducing penalty terms and relaxation-plane constraints into the objective function. The modified objective function is defined as:

$$\min F' = F + \chi_0 F_\chi \tag{30}$$

where $F$ denotes the original objective function, and $\chi_0$ is the contraction coefficient used to balance the trade-off between the original objective and the penalty term. The function $F_\chi$ represents the penalty function introduced during the iterative contraction process, and is defined as:

$$F_\chi = \sum_{t \in \Omega_T} \left( \sum_{(i,j) \in \Omega_{\text{line}}} (I_{ij,\max})^2 r_{ij} + \sum_{i \in \Omega_{\text{SOP}}} P_{i,t}^{SOP,\text{L}} \right) \tag{31}$$

The penalty term $F_\chi$ comprehensively reflects the additional losses caused by line flows and flexible devices. By adjusting its weight in each iteration, the algorithm progressively approximates and contracts the non-convex feasible region. This approach ensures that the solution space moves closer to the global optimum while maintaining feasibility.

(3) Linear Cutting-Plane Contraction Step

Based on the solution obtained in the previous iteration, the following linear cutting-plane constraints are constructed:

$$\left(I_{ij,\max}\right)^2 - \frac{P_{ij,t}^2 + Q_{ij,t}^2}{v_{i,t}} \leq 0 \tag{32}$$

$$P_{i\&j,t}^{E-SOP,L} - A_i^{E-SOP}\sqrt{\left(P_{i\&j,t}^{E-SOP,AC}\right)^2 + \left(Q_{i\&j,t}^{E-SOP,AC}\right)^2} \leq 0 \tag{33}$$

After each iteration, the relaxation gap is evaluated using the current solution. If the relaxation gap satisfies the predefined convergence criterion, the algorithm is considered to have converged. Otherwise, the penalty weight is increased, and the problem is re-solved until the convergence condition is met.

(4) Overview of the Algorithm Procedure

a. Initialization: Set the residual threshold $\varepsilon_g$, initial penalty weight $\chi_0$, and step-size factor $\omega$
b. Initial Solution: Solve the relaxed model using the modified objective function F′ to obtain an initial optimal solution.
c. Constraint Update: Calculate the relaxation gap based on the current solution and add linear cutting-plane constraints.
d. Successive Contraction: Gradually increase the penalty coefficient and iteratively solve the modified model.
e. Convergence Check: If the relaxation gaps in all scenarios satisfy the convergence criterion, output the optimal solution; otherwise, continue iterating.

This method preserves the tractability of the SOCP-relaxed model while approximating the original non-convex constraints through penalty terms and cutting-plane contractions. It effectively reduces the relaxation error and yields physically feasible optimal solutions. Compared with traditional one-shot relaxation methods, the SCCR algorithm offers a better balance between solution accuracy and computational stability, making it particularly suitable for ADN planning problems involving multiple types of flexible resources and uncertain scenarios.

## 5. Case Study

### *5.1. Case Setup*

A modified version of the Portuguese 54-bus distribution network proposed in [21] is adopted as the test system. The original topology, nodal loads, and line parameters are all derived from [21]. Source-load data are obtained from real operational measurements of a distribution network in northern China.

(1) Substations

The system includes four substations: S1 and S2 are existing substations, while S3 and S4 are newly planned. The capacity, investment, and operation parameters are as follows: S1 has an initial capacity of 16.7 MVA and can be expanded to 33.4 MVA, with an investment cost of 8 million CNY and annual maintenance cost of 15,000 CNY. S2 has an initial capacity of 30 MVA with an expandable capacity of 13.3 MVA, an investment cost of 7.6 million CNY, and annual maintenance cost of 15,000 CNY. S3 and S4 are newly planned substations with capacities of 22.2 MVA each, investment cost of 12 million CNY, and annual maintenance cost of 20,000 CNY. The electricity purchase price from the main grid is assumed to be 0.5 CNY/kWh.

(2) Feeders

The unit-length impedance of the distribution lines is 0.307 Ω/km + j 0.380 Ω/km, with a rated transmission capacity of 6.12 MVA. The investment cost is approximately 245,200 CNY/km, and annual maintenance cost is 3000 CNY/km.

(3) E-SOP System

Candidate branches for E-SOP installation include: 6–26, 8–34, 9–22, 25–33, 38–32, 13–43, and 46–50. Each SOP unit is rated at 100 kVA, with an investment cost of 1000 CNY/kVA, a power loss coefficient of 0.02, and an O&M coefficient of 0.01. The BESS component of E-SOP has a unit energy cost of 1000 CNY/kWh and a unit power cost of 1500 CNY/kW. Annual O&M cost for BESS is 0.35 CNY/kWh. The total energy capacity of BESS is limited to 6000 kWh, and the total power capacity is limited to 2000 kW. The initial state of charge (SOC) for typical operation days is set to 0.5, with allowable variation in the range [0.2, 1.0].

(4) DG

Candidate nodes for PV installation: 10, 25, 38, 39, 46, 47. Candidate nodes for wind power installation: 24, 34, 37, 38, 39. Unit investment cost: 4300 CNY/kW for PV and 5600 CNY/kW for wind. Annual O&M cost: 0.03 CNY/kWh. The rated power per unit is 100 kW, and the power factor is adjustable between 0.95 leading and 0.95 lagging. The maximum DG penetration in the system is limited to 60%.

(5) Other Parameters

The planning horizon is set to 15 years, with a discount rate of 5%. The allowable voltage range at each node is [0.95, 1.05] p.u., and the load power factor is set to 0.9. It should be noted that the candidate installation sites for BESS, SOP, and RES in this study are defined based on a unified case-level assumption. This modeling approach is consistent with the common practice in existing studies, where candidate nodes are predefined and the final deployment scheme is determined by the optimization model. Such a setting does not compromise the generality or optimality of the proposed model.

### *5.2. Wind–Solar Output Scenario Generation Based on WGAN-GP*

In this study, real measured wind and PV output data are used as the baseline samples. The WGAN-GP model is employed to learn and reproduce the probabilistic distribution characteristics of the joint wind–solar output, thereby generating a set of stochastic scenarios that are statistically consistent with historical data patterns.

To verify the validity of the generated data, the cumulative distribution functions (CDF) of the generated samples and historical samples are compared, as shown in Figures 3 and 4. The original wind and PV data are sampled at 5-min intervals, resulting in 288 data points per day for each source. After generating wind and PV scenarios, the time resolution is converted to an hourly scale during the planning stage to align with the load data.

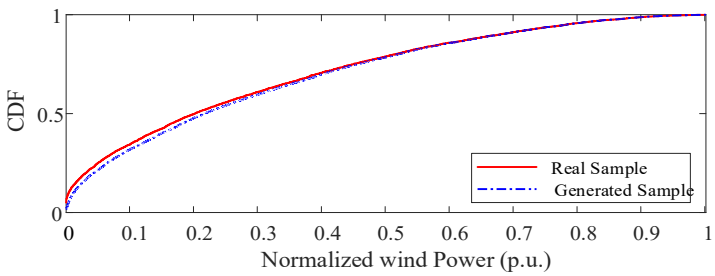


**Figure 3.** CDF of wind power.

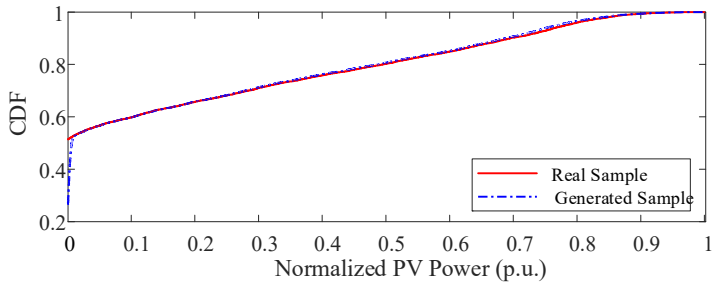


**Figure 4.** CDF of PV output.

As shown in the figures, the cumulative distribution curves of the generated samples closely match those of the historical data, indicating that the wind–PV output scenarios generated by the WGAN-GP model can accurately capture the fluctuation characteristics and distributional properties of the actual output.

To reduce the computational burden of the subsequent planning model, a K-medoids clustering algorithm is applied to extract representative scenarios. The number of clusters is evaluated using the Silhouette Coefficient (SC) method, and the best clustering performance is achieved when SC = 4. Finally, the cluster centers are selected as typical representative scenarios, resulting in 4 typical scenarios for both wind and PV generation. These are superimposed with the load curves of the original representative days to form 4 typical daily net load curves, which serve as inputs for the multi-scenario optimization model.

### *5.3. Planning Results Analysis*

(1) Analysis of Planning Results Considering Uncertainty

By comparing planning schemes with and without the consideration of wind–solar output uncertainty, the impact of uncertainty modeling on ADN planning outcomes can be more intuitively evaluated. As shown in Table 1, when uncertainty is considered, the system's annual total cost increases from 1.4743 million CNY to 1.4916 million CNY, representing an increase of approximately 1.2%.

**Table 1.** Impact of Uncertainty on Planning Results.

| Item ($10^4$ CNY) | Planning with WGAN-Based Uncertainty | Planning Without Uncertainty |
|---|---|---|
| Annual Total Cost | 148.97 | 146.74 |
| Feeder Investment Cost | 3.21 | 2.82 |
| Substation Investment Cost | 2.74 | 2.49 |
| E-SOP Investment Cost | 1.77 | 1.05 |
| PV Investment Cost | 8.04 | 6.91 |
| Wind Investment Cost | 3.98 | 3.03 |
| Electricity Purchase Cost | 126.27 | 128.32 |
| Equipment O&M Cost | 2.96 | 2.12 |
| Wind/Solar Curtailment Penalty | 0 | 0 |

This increase is primarily attributed to the enhanced allocation of flexible devices and DG resources, which improves the system's adaptability to stochastic fluctuations. Specifically, the investments in feeders, substations, and E-SOP devices all increase. Meanwhile, the installed capacities of PV and wind power are expanded, which enhances local energy utilization capability.

Overall, considering uncertainty leads to a slight increase in system investment. However, the expanded deployment of flexible resources such as E-SOPs significantly improves operational flexibility and robustness, enabling a better balance between economic efficiency and system reliability in the planning scheme. For scenarios where the impact of uncertainty is relatively small or computational resources are limited, deterministic

planning can serve as a practical approximation. However, in applications involving high uncertainty and high renewable penetration, the proposed uncertainty-aware modeling approach remains necessary and of significant engineering relevance.

(2) Analysis of Planning Results Considering E-SOP

To further verify the economic efficiency and flexibility of the proposed E-SOP coordinated planning model, a comparative analysis is conducted among three flexible resource configuration schemes:

(a) SOP-only configuration: The system includes conventional resources such as feeders, substations, PV, and wind power, but does not include any energy storage devices.
(b) BESS-only configuration: The system also includes feeders, substations, PV, and wind power, but no flexible interconnection devices (i.e., no SOP).
(c) E-SOP configuration (proposed scheme): The system includes feeders, substations, PV, and wind power, along with E-SOP devices integrating both SOP and BESS.

The cost composition of each configuration scheme is summarized in Table 2.

**Table 2.** Impact of Different Configuration Schemes on Planning Results.

| Case | Investment + O&M Cost ($10^4$ CNY) | Electricity Purchase Cost ($10^4$ CNY) | Curtailment Penalty Cost ($10^4$ CNY) | Annual Total Cost ($10^4$ CNY) |
|---|---|---|---|---|
| a | 15.93 | 141.23 | 0.73 | 157.89 |
| b | 19.50 | 133.00 | 0.21 | 152.71 |
| c | 22.7 | 126.27 | 0 | 148.97 |

As shown in the table, the configuration scheme with E-SOP achieves the best overall economic performance, with an annual total system cost of 1.4897 million CNY—representing a reduction of 89,200 CNY and 37,400 CNY compared to the SOP-only and BESS-only configurations, respectively. Although the investment and maintenance costs of the E-SOP scheme are relatively higher, it enables coordinated power flow reconfiguration and temporal energy shifting by integrating the BESS on the DC side. This significantly enhances the spatiotemporal flexibility and renewable energy hosting capacity of the system.

As a result, the planned installed capacities of distributed PV and wind power are further increased, reducing reliance on power purchases from the upstream grid. With higher levels of local renewable energy utilization, the E-SOP scheme effectively mitigates power flow congestion and reverse power flow during peak periods. The system's dependency on the main grid is significantly reduced, with electricity purchase costs dropping to 1.2627 million CNY, and wind and solar curtailment entirely eliminated.

These results demonstrate that the integration of E-SOP not only improves the ADN's ability to accommodate the stochastic fluctuations of renewable energy but also enables coordinated interaction among source, network, load, and storage components—leading to enhanced overall system economic performance. The planning results regarding substation expansion and feeder layout under the proposed method are illustrated in Figure 5.

In summary, the coordinated planning of E-SOP achieves a new optimal balance among system economy, operational flexibility, and renewable energy integration by moderately increasing the allocation of flexible resources at the investment stage in exchange for significant operational cost savings and improved resource utilization. This approach provides a feasible technical pathway and valuable reference for the expansion planning of ADNs under high-penetration DG conditions.

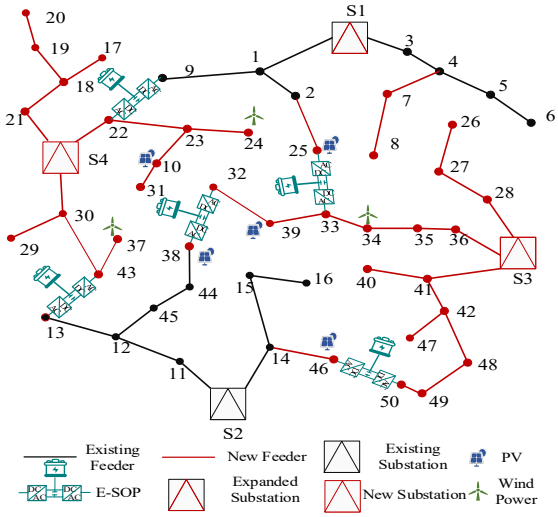


**Figure 5.** Planning results of the proposed method.

(3) Algorithm Effectiveness Analysis

To verify the effectiveness and computational performance of the proposed iterative contraction convex relaxation algorithm, it is applied to the ADN expansion planning model with E-SOP integration. The results are compared with those obtained using a conventional convex–concave programming (CCP) algorithm [22].

The convergence process of the proposed algorithm is illustrated in Figure 6. As shown, the convex relaxation gap decreases rapidly with the increase in iteration count, and convergence is achieved after the third iteration, with the relaxation gap reduced to below the order of $10^{-5}$, meeting the required model accuracy. These results demonstrate that the proposed algorithm exhibits good convergence behavior and numerical stability.

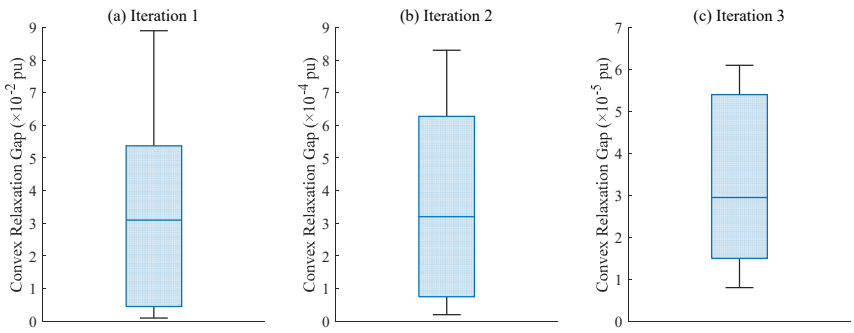


**Figure 6.** Iterative process of the algorithm.

To further evaluate the algorithm's performance, a comparative analysis of the results obtained by the two methods is conducted, as summarized in Table 3. Both methods yield the same annual total cost of 1.4897 million CNY, confirming the reliability of the proposed algorithm in terms of solution accuracy.

**Table 3.** Comparison of Solution Performance Between Different Algorithms.

| Algorithm | Annual Total Cost ($10^6$ CNY) | Number of Iterations | Computation Time (h) |
|---|---|---|---|
| Proposed Algorithm | 148.97 | 3 | 3.12 |
| CCP | 148.97 | 8 | 8.32 |

However, the proposed algorithm demonstrates superior convergence speed and computational efficiency. It reaches convergence within only 3 iterations and a computation time of approximately 3.12 h. In contrast, the traditional convex–concave programming

(CCP) algorithm requires 8 iterations and about 8.32 h to converge, and it results in a slightly larger convex relaxation gap.

These results indicate that the proposed iterative contraction convex relaxation algorithm not only ensures high solution accuracy but also significantly improves convergence efficiency and numerical stability. It proves to be well-suited for complex, multi-scenario ADN expansion planning problems and offers an efficient solution framework for future optimization studies involving diverse flexible resources.

## 6. Conclusions

The main conclusions of this paper are as follows:

(1) The WGAN-GP-based wind–solar scenario generation model effectively captures the high-dimensional stochastic characteristics and temporal correlations of renewable energy outputs. The generated samples exhibit strong consistency with historical data in terms of probabilistic distribution and coverage of extreme events. Compared to traditional probabilistic fitting and clustering methods, the WGAN-GP model does not rely on distributional assumptions, resulting in scenarios that are more realistic and representative, thereby providing high-quality input data for planning models.

(2) The constructed E-SOP flexible interconnection system integrates an energy storage unit on the DC side of the SOP, achieving a synergistic combination of spatial power flow regulation and temporal energy balancing. Compared with configurations using only SOP or BESS, the E-SOP significantly enhances the system's spatiotemporal coordinated control capability, increases the installed capacity of DG, and improves local renewable energy utilization.

(3) The proposed integrated expansion planning model for distribution networks optimizes the allocation of DGs, E-SOPs, feeders, and substations within a unified framework, enabling coordinated planning of generation, network, and storage. The results show that although the total system cost slightly increases when considering uncertainty and flexible resource allocation, the system's operational flexibility and robustness are significantly enhanced. This leads to a more engineering-feasible planning outcome in terms of reliability assurance and long-term operational performance.

(4) The proposed SCCR algorithm demonstrates excellent performance in solving such non-convex planning models. It quickly converges to a high-accuracy feasible solution with fewer iterations and achieves approximately twice the computational efficiency of the conventional convex–concave programming method, verifying both the feasibility and effectiveness of the proposed algorithm.

In future research, sensitivity analyses will be conducted to investigate the impacts of varying renewable penetration limits and curtailment penalty factors on planning outcomes, thereby enabling a more systematic assessment of the E-SOP's effectiveness under extremely high renewable penetration scenarios.

**Author Contributions:** Conceptualization, D.W. and X.W. (Xuchen Wang); methodology, M.D.; software, Z.W.; validation, Y.S.; formal analysis, Z.W. and S.W.; investigation, X.L.; resources, Z.W., H.N. and F.L.; data curation, Y.S. and X.W. (Xiangyi Wu); writing—original draft preparation, H.N.; writing—review and editing, F.L. All authors have read and agreed to the published version of the manuscript.

**Funding:** The authors declare that this study received funding from the Science and Technology Projects of the State Grid Tianjin Electric Power Company (No. SGTJJX00DKJS2500650). The funder had the following involvement with the study: Provision of study data, computing resources, or other analysis tools.

**Data Availability Statement:** The data presented in this study are available on request from the corresponding author due to privacy reasons.

**Acknowledgments:** The authors would also like to thank the anonymous reviewers for their valuable comments and suggestions to improve the quality of the paper.

**Conflicts of Interest:** D.W., X.W. (Xuchen Wang), M.D., Z.W., Y.S., X.L., X.W. (Xiangyi Wu) and H.N. were employed by State Grid Tianjin Electric Power Company. The remaining authors declare that the research was conducted in the absence of any commercial or financial relationships that could be construed as a potential conflict of interest. The authors declare that this study received funding from State Grid Tianjin Electric Power Company. The funder was not involved in the study design, collection, analysis, interpretation of data, the writing of this article or the decision to submit it for publication.

## References

1. Luo, F.; Wang, S.; Lv, Y.; Mu, R.; Fo, J.; Zhang, T.; Xu, J.; Wang, C. Domain Knowledge-Enhanced Graph Reinforcement Learning Method for Volt/Var Control in Distribution Networks. *Appl. Energy* **2025**, *398*, 126409. [CrossRef]
2. Wang, S.; Luo, F.; Wang, C.; Lyu, Y.; Fo, J.; Ge, L. Collaborative Configuration Optimization of Soft Open Points and Distributed Multi-Energy Stations with Spatiotemporal Coordination and Complementarity. *J. Mod. Power Syst. Clean Energy* **2025**, *13*, 2086–2097. [CrossRef]
3. Ergun, S.; Dik, A.; Boukhanouf, R.; Omer, S. Large-Scale Renewable Energy Integration: Tackling Technical Obstacles and Exploring Energy Storage Innovations. *Sustainability* **2025**, *17*, 1311. [CrossRef]
4. Wang, S.; Luo, F.; Fo, J.; Lv, Y.; Wang, C. Two-Stage Spatiotemporal Decoupling Configuration of SOP and Multi-Level Electric-Hydrogen Hybrid Energy Storage Based on Feature Extraction for Distribution Networks with Ultra-High DG Penetration. *Appl. Energy* **2025**, *398*, 126438. [CrossRef]
5. Zhou, H.; Xiong, G.; Fu, X.; Wong, M.-C.; Dessaint, L.-A.; Al-Haddad, K. Joint Optimization of Location and Topology of Multi-Terminal Soft Open Point in Distribution Networks. *Int. J. Electr. Power Energy Syst.* **2025**, *169*, 110721. [CrossRef]
6. Jiang, X.; Zhou, Y.; Ming, W.; Yang, P.; Wu, J. An Overview of Soft Open Points in Electricity Distribution Networks. *IEEE Trans. Smart Grid* **2022**, *13*, 1899–1910. [CrossRef]
7. Scrocca, A.; Pisani, R.; Andreotti, D.; Rancilio, G.; Delfanti, M.; Bovera, F. Optimal Spot Market Participation of PV + BESS: Impact of BESS Sizing in Utility-Scale and Distributed Configurations. *Energies* **2025**, *18*, 3791. [CrossRef]
8. Nyamathulla, S.; Dhanamjayulu, C. A Review of Battery Energy Storage Systems and Advanced Battery Management System for Different Applications: Challenges and Recommendations. *J. Energy Storage* **2024**, *86*, 111179. [CrossRef]
9. Wang, X.; Li, F.; Zhang, Q.; Shi, Q.; Wang, J. Profit-Oriented BESS Siting and Sizing in Deregulated Distribution Systems. *IEEE Trans. Smart Grid* **2023**, *14*, 1528–1540. [CrossRef]
10. Wang, W.; Zhang, X.; Fu, L.; Liao, M.; Xu, X. A Data-Driven Chance-Constrained BESS Planning in Distribution Networks by a Decoupling Solution Method. *J. Energy Storage* **2024**, *80*, 110157. [CrossRef]
11. Yang, L.; Li, Y.; Zhang, Y.; Xie, Z.; Chen, J.; Qu, Y. Optimal Allocation Strategy of SOP in Flexible Interconnected Distribution Network Oriented High Proportion Renewable Energy Distribution Generation. *Energy Rep.* **2024**, *11*, 6048–6056. [CrossRef]
12. Mahdavi, M.; Schmitt, K.E.K.; Chamana, M.; Bayne, S. Evaluation of Voltage Fluctuations Effect on Reconfiguration of Distribution Systems. *IEEE Syst. J.* **2024**, *18*, 198–209. [CrossRef]
13. Wang, C.; Song, G.; Li, P.; Ji, H.; Zhao, J.; Wu, J. Optimal Siting and Sizing of Soft Open Points in Active Electrical Distribution Networks. *Appl. Energy* **2017**, *189*, 301–309. [CrossRef]
14. Ramadan, A.; Ebeed, M.; Kamel, S.; Abdelaziz, A.Y.; Haes Alhelou, H. Scenario-Based Stochastic Framework for Optimal Planning of Distribution Systems Including Renewable-Based DG Units. *Sustainability* **2021**, *13*, 3566. [CrossRef]
15. Oda, E.S.; Hamed, A.M.A.E.; Ali, A.; Elbaset, A.A.; Sattar, M.A.E.; Ebeed, M. Stochastic Optimal Planning of Distribution System Considering Integrated Photovoltaic-Based DG and DSTATCOM Under Uncertainties of Loads and Solar Irradiance. *IEEE Access* **2021**, *9*, 26541–26555. [CrossRef]
16. Ebrahimi, H.; Rezaeian-Marjani, S.; Galvani, S.; Talavat, V. Probabilistic Optimal Planning in Active Distribution Networks Considering Non-linear Loads Based on Data Clustering Method. *IET Gener. Transm. Distrib.* **2022**, *16*, 686–702. [CrossRef]
17. Liang, Z.; Chung, C.Y.; Wang, Q.; Chen, H.; Yang, H.; Wu, C. Fortifying Renewable-Dominant Hybrid Microgrids: A Bi-Directional Converter Based Interconnection Planning Approach. *Engineering* **2025**, *51*, 130–143. [CrossRef]
18. Lavorato, M.; Franco, J.F.; Rider, M.J.; Romero, R. Imposing Radiality Constraints in Distribution System Optimization Problems. *IEEE Trans. Power Syst.* **2012**, *27*, 172–180. [CrossRef]
19. Grover-Silva, E.; Girard, R.; Kariniotakis, G. Optimal Sizing and Placement of Distribution Grid Connected Battery Systems through an SOCP Optimal Power Flow Algorithm. *Appl. Energy* **2018**, *219*, 385–393. [CrossRef]
20. Sharma, A.; Paul, S.; Padhy, N.P. Two-Stage Optimal Operation of SOPs in Active Three-Phase Distribution Systems. In Proceedings of the 2023 IEEE 3rd International Conference on Smart Technologies for Power, Energy and Control (STPEC), Bhubaneswar, India, 10–13 December 2023; IEEE: Bhubaneswar, India, 2023; pp. 1–6.

21. Miranda, V.; Ranito, J.V.; Proenca, L.M. Genetic Algorithms in Optimal Multistage Distribution Network Planning. *IEEE Trans. Power Syst.* **1994**, *9*, 1927–1933. [CrossRef]
22. Ji, H.; Wang, C.; Li, P.; Zhao, J.; Song, G.; Wu, J. Quantified Flexibility Evaluation of Soft Open Points to Improve Distributed Generator Penetration in Active Distribution Networks Based on Difference-of-Convex Programming. *Appl. Energy* **2018**, *218*, 338–348. [CrossRef]

**Disclaimer/Publisher's Note:** The statements, opinions and data contained in all publications are solely those of the individual author(s) and contributor(s) and not of MDPI and/or the editor(s). MDPI and/or the editor(s) disclaim responsibility for any injury to people or property resulting from any ideas, methods, instructions or products referred to in the content.